POLARIS 900x900 SQ

1450030

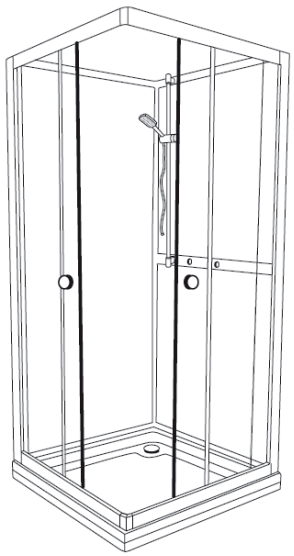

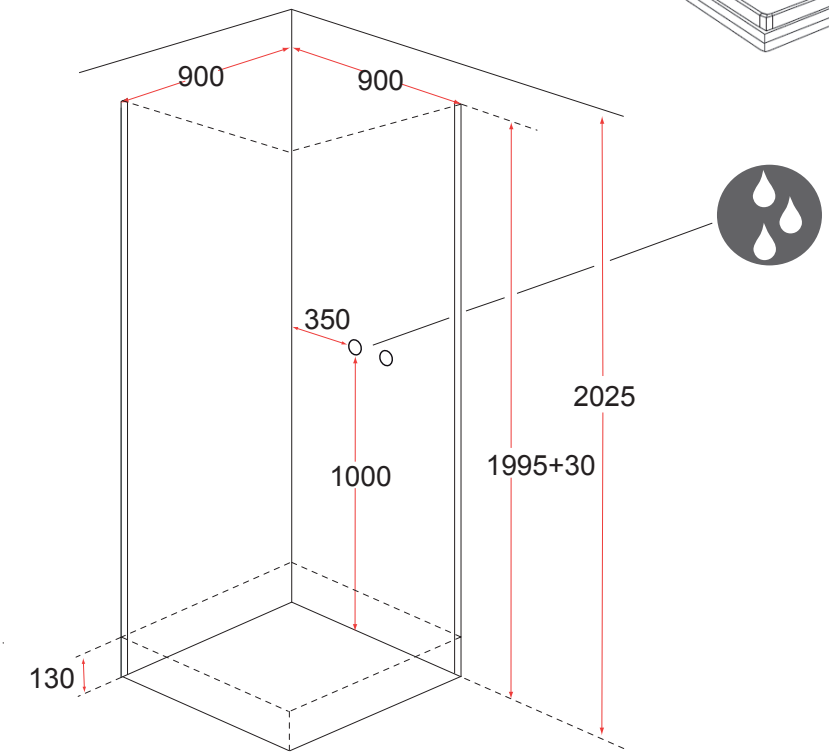

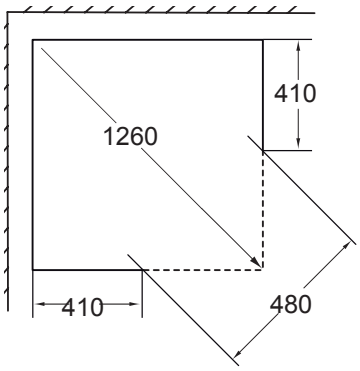

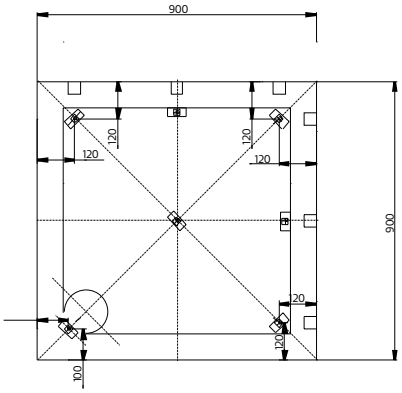

2010-08-04

www.hafa.se